REVISIONS					
REV	ECO	DESCRIPTION	DATE	BY	APPR
A1	-	RELEASE NEW DRAWING	Sep/28/23	LUCAS	TOMMY
A2	-	UPDATE THE DRAWING VIEW	Feb/14/25	LUCAS	TOMMY

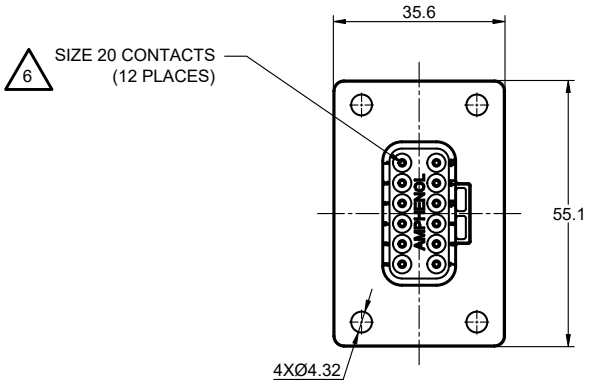

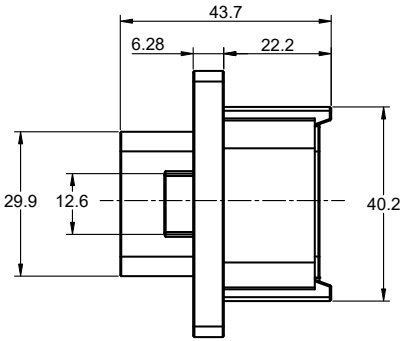

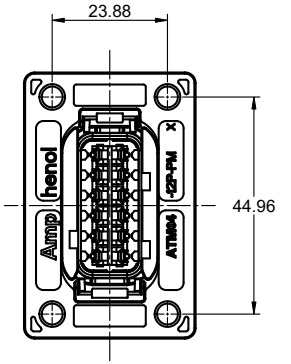

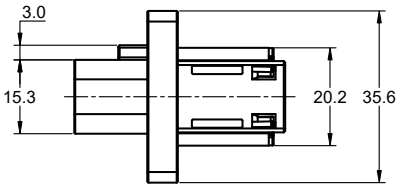

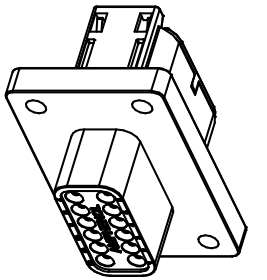

NOTES: UNLESS OTHERWISE SPECIFIED

1. MATERIAL:
   HOUSING: THERMOPLASTIC;
   SEAL: SILICONE RUBBER; COLOR: GREEN

2. MODIFICATIONS: FRONT PANEL MOUNT;NORMAL DIAMETER SEAL

3. SPECIFICATIONS:
   3.1 OPERATING TEMPERATURE: -55℃ TO +125℃.
   3.2 DIELECTRIC WITHSTANDING VOLTAGE: LESS THAN 2 MILLIAMPS CURRENT LEAKAGE @ 1500 VOLTS AC.
   3.3 INSULATION RESISTANCE: 1000 MEGOHM MIN @ 25℃.
   3.4 MOISTURE RESISTANCE: IP67 & IP69K (MATED CONDITION).
   3.5 MATING CYCLE DURABILITY: 100 CYCLES
   3.6 RoHS COMPLIANT

4. MATING PART:ATM06-12SX* (X = A,B,C,D KEYS,*=ALL MODIFACATION)

5. ALL DIMENSIONS ARE FOR REFERENCE USE ONLY.

6 CONTACT SIZE AND WIRE RANGE:

CONTACT SIZE	MIN. INSUL O.D.	MAX. INSUL O.D.	TYPICAL WIRE RANGE
20	1.35 mm (.053 in)	3.05 mm (.12 in)	16-20 AWG (1.0-0.5mm²)

	ATM04-12Px-PM61	REF:2303064-X	
	PART NUMBER	DESCRIPTION	ITEM
QUANTITY	MATERIALS LIST		

UNLESS OTHERWISE SPECIFIED
1) All dimensions are in metric(mm).
2) Tolerances are as follows:
1 PL DEC ±0.30 | Fractions ±1/64
2 PL DEC ±0.15 | Angles ±1°
3 PL DEC ±0.08
3) Note reference = X

MATERIAL SPECIFICATIONS:

PROCESS SPECIFICATIONS:

NEXT ASS'Y:

SIGNATURES		DATE
DRAWN:	LUCAS.CHAI	Feb/14/25
CHECKED:	ORION.LI	Feb/17/25
ENGINEER:		
APPROVAL:	TOMMY.XIE	Feb/17/25
CUSTOMER:		

THIS DRAWING IS SUPPLIED FOR INFORMATION ONLY. DESIGN FEATURES, SPECIFICATIONS AND PERFORMANCE DATA SHOWN HEREON ARE THE PROPERTY OF THE AMPHENOL CORPORATION. NO RIGHTS OF REPRODUCTION ARE IMPLIED. ALL DIMENSIONS ARE SUBJECT TO NORMAL MANUFACTURING VARIATIONS.

Amphenol

Sine Systems - www.amphenol-sine.com
44724 Morley Drive
Clinton Township, MI 48036

12 POS, FRONT MOUNT RECEPT. W/ FLANGE, PIN, PANELMATE™ ATM, KEYED, STD SEAL

SIZE	TYPE	DWG NO:	REVISION
B	C-	ATM04-12Px-PM61	A2

SCALE: NONE SHEET 1 OF 3

TITLE: 12POS, FRONT MOUNT RECEPT. W/ FLANGE, PIN, PANELMATE™ ATM, KEYED, STD SEAL
DWG NO: ATM04-12Px-PM61
REV: A2
SH: 1
OF: 3

REVISIONS					
REV	ECO	DESCRIPTION	DATE	BY	APPR
A1	-	RELEASE NEW DRAWING	Sep/28/23	LUCAS	TOMMY
A2	-	UPDATE THE DRAWING VIEW	Feb/14/25	LUCAS	TOMMY

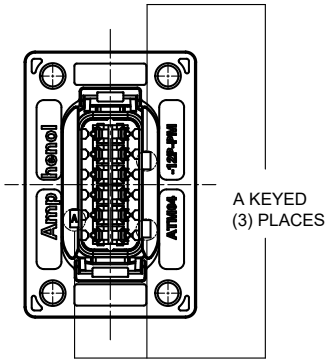

A KEYED
(3) PLACES

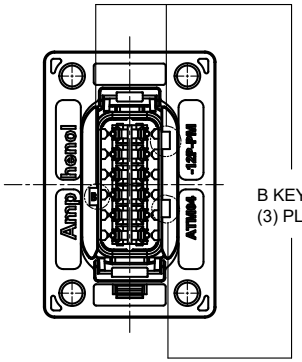

B KEYED
(3) PLACES

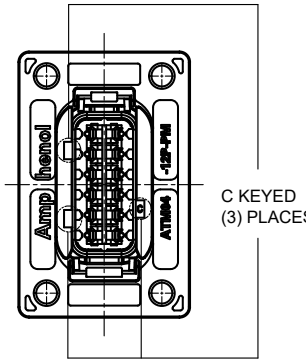

C KEYED
(3) PLACES

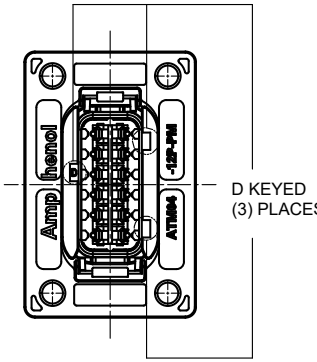

D KEYED
(3) PLACES

KEY-A CONFIGURATION	
COLOR	PART NUMBER
GRAY	ATM04-12PA-PM61

KEY-B CONFIGURATION	
COLOR	PART NUMBER
BLACK	ATM04-12PB-PM61

KEY-C CONFIGURATION	
COLOR	PART NUMBER
GREEN	ATM04-12PC-PM61

KEY-D CONFIGURATION	
COLOR	PART NUMBER
BROWN	ATM04-12PD-PM61

	PART NUMBER	DESCRIPTION	ITEM
QUANTITY	MATERIALS LIST		

UNLESS OTHERWISE SPECIFIED
1) All dimensions are in metric(mm).
2) Tolerances are as follows:
1 PL DEC ±0.30 | Fractions ±1/64
2 PL DEC ±0.15 | Angles ±1°
3 PL DEC ±0.08
3) Note reference = X

MATERIAL SPECIFICATIONS:

PROCESS SPECIFICATIONS:

NEXT ASS'Y:

SIGNATURES		DATE
DRAWN:	LUCAS.CHAI	Feb/14/25
CHECKED:	ORION.LI	Feb/17/25
ENGINEER:		
APPROVAL:	TOMMY.XIE	Feb/17/25
CUSTOMER:		

THIS DRAWING IS SUPPLIED FOR INFORMATION ONLY. DESIGN FEATURES, SPECIFICATIONS AND PERFORMANCE DATA SHOWN HEREON ARE THE PROPERTY OF THE AMPHENOL CORPORATION. NO RIGHTS OF REPRODUCTION ARE IMPLIED. ALL DIMENSIONS ARE SUBJECT TO NORMAL MANUFACTURING VARIATIONS.

Amphenol
Sine Systems - www.amphenol-sine.com
44724 Morley Drive
Clinton Township, MI 48036

12 POS, FRONT MOUNT RECEPT. W/ FLANGE,
PIN, PANELMATE™ ATM, KEYED, STD SEAL

SIZE	TYPE	DWG NO:	REVISION
B	C-	ATM04-12Px-PM61	A2

SCALE: NONE SHEET 2 OF 3

TITLE: 12POS,FRONT MOUNT RECEPT. W/ FLANGE, PIN, PANELMATE™ ATM, KEYED, STD SEAL
DWG NO: ATM04-12Px-PM61
REV: A2
SH: 2
OF: 3

REVISIONS					
REV	ECO	DESCRIPTION	DATE	BY	APPR
A1	-	RELEASE NEW DRAWING	Sep/28/23	LUCAS	TOMMY
A2	-	UPDATE THE DRAWING VIEW	Feb/14/25	LUCAS	TOMMY

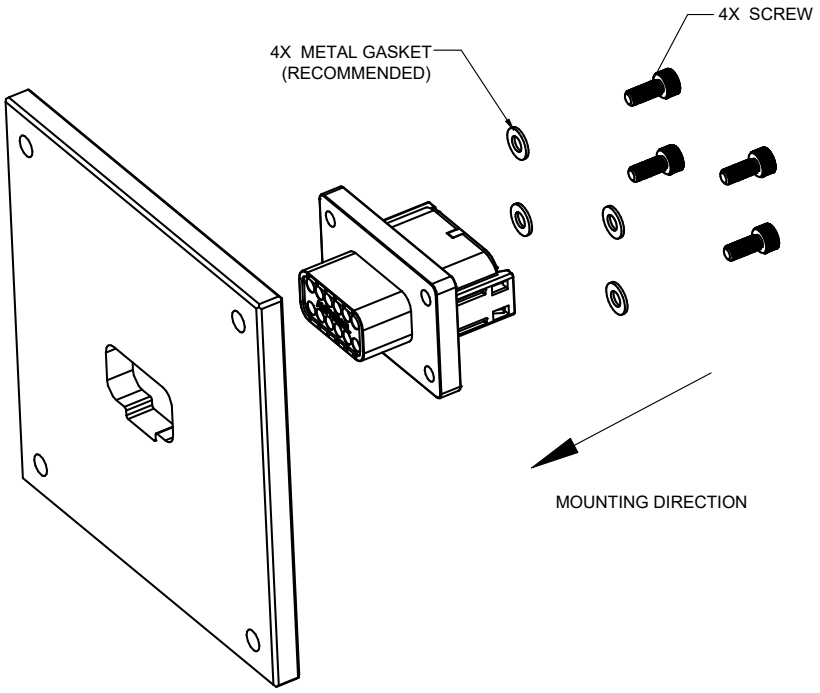

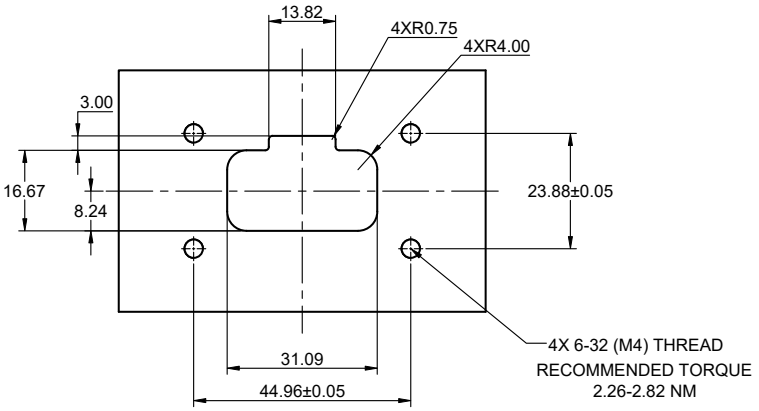

RECOMMENDED PANEL
MOUNTING HOLE

QUANTITY	PART NUMBER	DESCRIPTION	ITEM

MATERIALS LIST

UNLESS OTHERWISE SPECIFIED
1) All dimensions are in metric(mm).
2) Tolerances are as follows:
1 PL DEC ±0.30 | Fractions ±1/64
2 PL DEC ±0.15 | Angles ±1°
3 PL DEC ±0.08
3) Note reference = X

MATERIAL SPECIFICATIONS:

PROCESS SPECIFICATIONS:

NEXT ASS'Y:

SIGNATURES		DATE
DRAWN:	LUCAS.CHAI	Feb/14/25
CHECKED:	ORION.LI	Feb/17/25
ENGINEER:		
APPROVAL:	TOMMY.XIE	Feb/17/25
CUSTOMER:		

THIS DRAWING IS SUPPLIED FOR INFORMATION ONLY. DESIGN FEATURES, SPECIFICATIONS AND PERFORMANCE DATA SHOWN HEREON ARE THE PROPERTY OF THE AMPHENOL CORPORATION. NO RIGHTS OF REPRODUCTION ARE IMPLIED. ALL DIMENSIONS ARE SUBJECT TO NORMAL MANUFACTURING VARIATIONS.

Amphenol

Sine Systems - www.amphenol-sine.com
44724 Morley Drive
Clinton Township, MI 48036

12 POS, FRONT MOUNT RECEPT. W/ FLANGE, PIN, PANELMATE™ ATM, KEYED, STD SEAL

SIZE	TYPE	DWG NO:	REVISION
B	C-	ATM04-12Px-PM61	A2

SCALE: NONE SHEET 3 OF 3

TITLE: 12POS, FRONT MOUNT RECEPT. W/ FLANGE, PIN, PANELMATE™ ATM, KEYED, STD SEAL
DWG NO: ATM04-12Px-PM61
REV: A2
SH: 3
OF: 3