SPECIAL CHARACTERISTICS (IO 515)			
REPORT Ⓜ		CRITICAL Ⓒ	
No.	SC	AREA	VALUE
01	Ⓒ	E12	OPERATING FEATURES
02	Ⓒ	E10	OPERATING FEATURES
03	Ⓒ	E9	CABLE FIXATION

REVISION HISTORY			
REV.	DESCRIPTION	NAME	DATE
0	FIRST ISSUE	E.GROSSI	12.04.16
1	P/N UPDATED TO 0301498/1x ACCORDING TO RMP 1600003-01_REV.0 ADDED DIMENSIONS AVAILABLE FOR THE TERMINALS	D.SCARPETTA	09.04.18

REPRESENTATIVE VIEW - ASSEMBLY CONFIGURATIONS

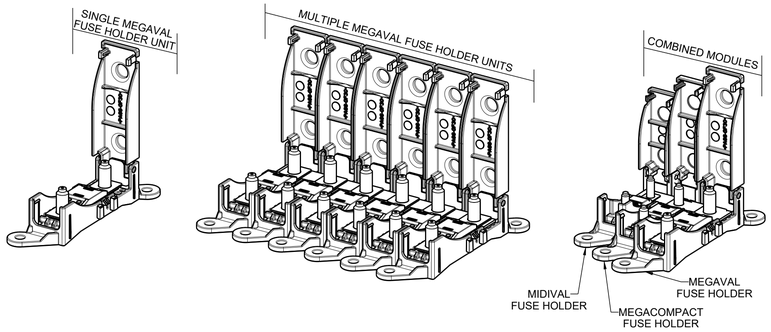

SCALE 1:2

REPRESENTATIVE VIEW OF FIXING POINTS WITH STUD M5

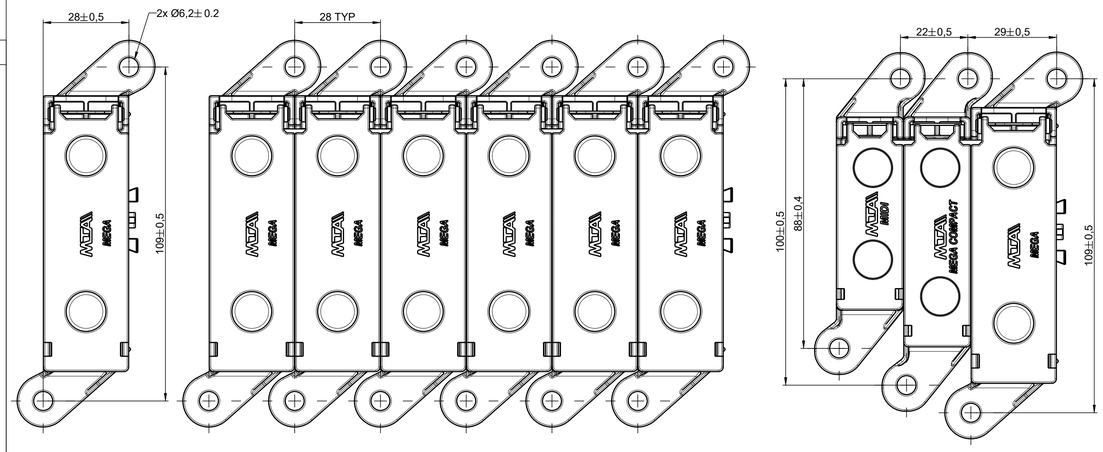

MEGAVAL FUSE HOLDER WITH ASSEMBLED COVER - OVERALL DIMENSIONS COMPLIANT WITH ISO 8820-5:2015 SF51

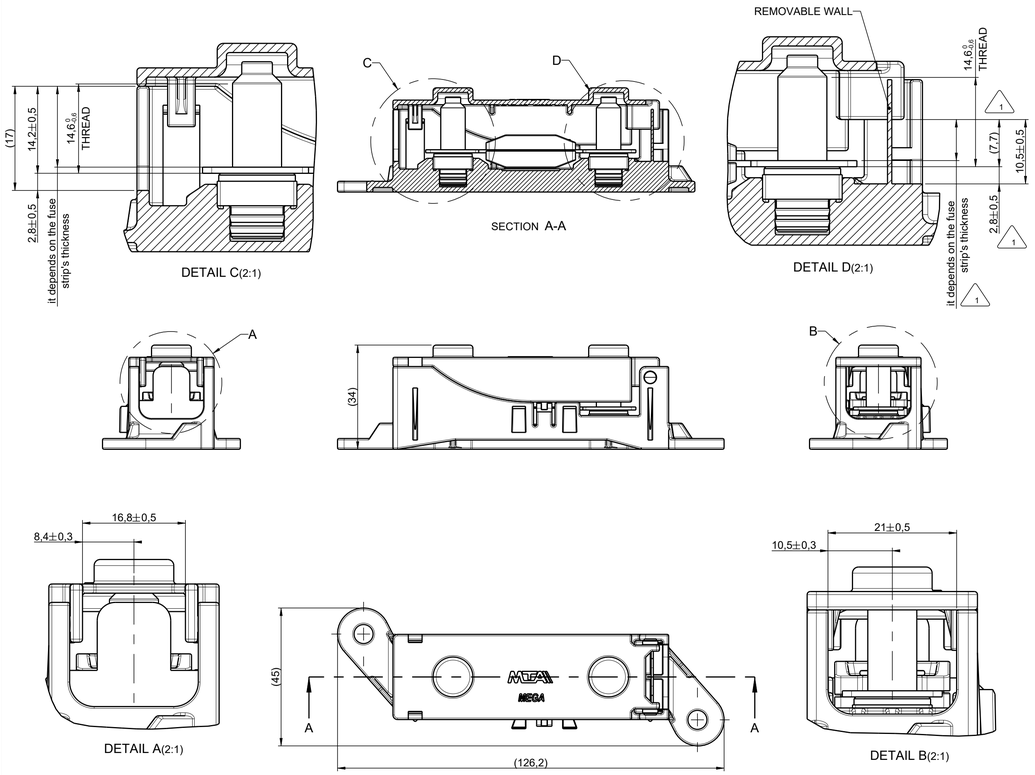

INSTALLATION

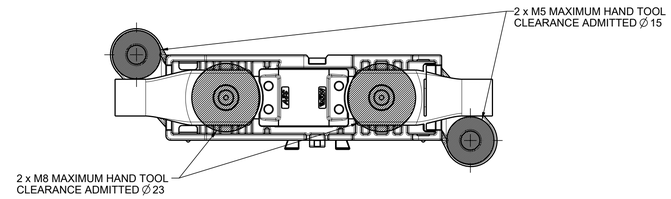

- USE TIE WRAPS / CLAMPS: HARNESS SHOULD BE SECURED FROM ANY MOVEMENT ONCE THE FUSE HOLDER IS INSTALLED (FOR BOTH INPUT AND OUTPUT CABLES).

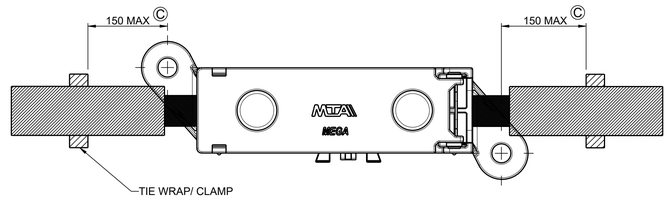

MTA M8 TERMINALS ASSOCIATED TABLE			
POS.	TERMINAL	MATERIAL	WIRE SECTION
A - B	1706760/xx	CuZn-Sn	8 ÷ 10 sqmm
A - B	1605100/xx	CuZn-Sn	16 sqmm
A - B	1605010/xx	CuZn-Sn	25 sqmm
A - B	1609330/xx	Cu-Sn	25 ÷ 40 sqmm
A - B	1605021/xx	Cu-Sn	35 sqmm
A - B	1607510/xx	Cu-Sn	35 ÷ 50 sqmm

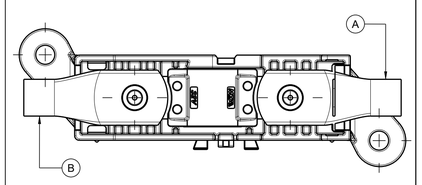

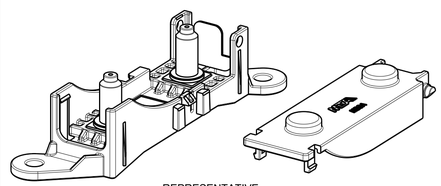

REPRESENTATIVE PERSPECTIVE VIEW (SUPPLY STATUS)

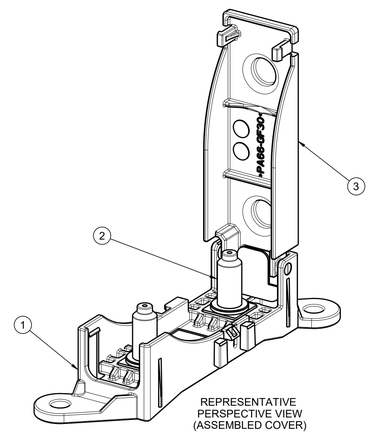

REPRESENTATIVE PERSPECTIVE VIEW (ASSEMBLED COVER)

UNCONTROLLED COPY
in case of drawing updating/revision
NO AUTOMATIC
resubmission will follow

OPERATING FEATURES		
FEATURES	UNIT	VALUE
V MAX	V	32
I MAX	A	SEE ADDITIONAL NOTE (1)
TEMPERATURE RANGE	°C	SEE ADDITIONAL NOTE (2)
VIBRATION CLASS	-	SEE ADDITIONAL NOTE (3)
IP	IEC 529	20
FLAMMABILITY	UL 94	HB
	FMVSS 302	<= 100 mm/min
Ⓒ FUSE AND TERMINAL TIGHTENING TORQUE M8	Nm	12 ± 1
Ⓒ TIGHTENING TORQUE M5 FIXING POINTS	Nm	3.5 +/- 10%

ADDITIONAL NOTE:
1)ACCORDING TO FUSE DERATING CURVE DVP_1600003_rev.1 Ⓒ
2)CONTINUOUS OPERATING TEMPERATURE RANGE:
-40°C ÷ +125°C (Overheating + T. Amb.)
NOT OPERATING MAX. TEMPERATURE: 160°C (Short period condition)
3)COMPONENT DESIGNED TO OPERATE
ENGINE COMPARTMENT (WHEELED VEHICLES)
4)NOT COMPLIANT TO CORROSIVE INDUSTRIAL ATMOSPHERE

IMPORTANT NOTE
1)CONSIDERING ALL POSSIBLE CONFIGURATIONS, IN ANY CASE, THE INSTALLER SHOULD TEST THE APPLICATION TO VERIFY THE PRODUCT MEETS THE CUSTOMER'S EXPECTATIONS. 2)IN CASE OF SINGLE MODULE APPLICATION THE COVER WILL BE IN THE SAME PACKAGE BUT NOT ASSEMBLED. 3)IN CASE OF COMBINED OR MULTIPLE CONFIGURATIONS THE COVER STATE OF SUPPLY WILL BE CHOSEN ACCORDING TO THE CUSTOMER'S NEEDS (ASSEMBLED OR NOT). 4)ASSOCIATED TERMINALS ARE DESCRIBED IN THE TABLE BELOW. 5)IN CASE OF COMBINED MULTIFUSE SEE ALSO: MEGACOMPACT FUSE HOLDER DRAWING 0301497/xx MIDIVAL FUSE HOLDER DRAWING 0301499/xx. 6)FOR THE CORRECT ASSEMBLY MUST BE USED SELF LOCKING NUT M8. STUDYING THE MAXIMUM HEIGHT OF THE NUTS ACCORDING TERMINALS HEIGHT TO GUARANTEE MINIMUM TWO THREADS AFTER THE ASSEMBLY 7)THERE IS A POSSIBILITY THAT THE TERMINAL AREA IS EXPOSED, IT CAN BE COVERED BY A THERMO-SHRINKING SHEATH. 8)IT IS SUGGESTED TO SCRAP THE FALLEN PIECES.

MEGAVAL FUSE HOLDER WITHOUT COVER OVERALL DIMENSIONS

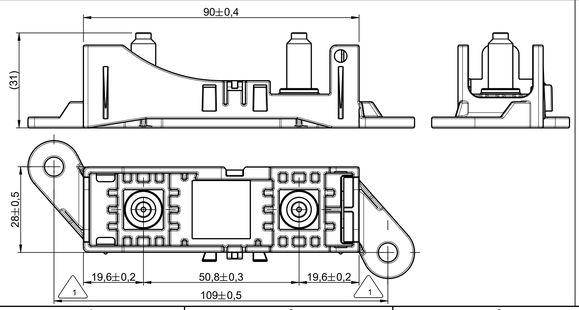

MEGAVAL FUSE HOLDER COVER OVERALL DIMENSIONS

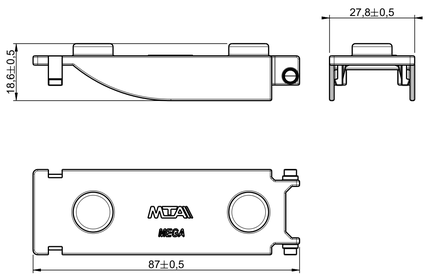

REFERENCE TABLE A-B POSITION MAXIMUM TERMINAL SIZE

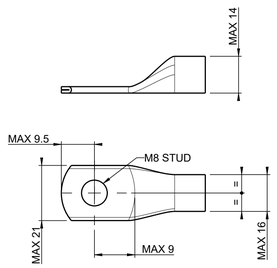

REPRESENTATIVE VIEW

POS.	Q.TY	DENOMINATION	MATERIAL
3	1	COVER	PA66-GF30 (BLACK)
2	2	SCREW M8	STEEL CL. 8.8 - ZnNi
1	1	BODY	PA66-GF30 (BLACK)

MTA P/N	0301498/1x	Denom.	MEGAVAL FUSE HOLDER
Draw No.	16003M-00A	Used for	-
Draw for	CLIENT	Material	SEE TABLE
Coating	SEE TABLE		
Colour	SEE TABLE		
Note			

	Date	Name
Draft.	06.05.16	E.GROSSI
Chk	-	-
Verif.	10.04.18	F.ZIMMITTI
PQApp	27.04.18	M.ROSSI
App.	27.04.18	G.SPATARO

Scale	Weight(g)	Lin.Tol.±	Ang.Tol.±
1:1	60	IO504	1
A1	Dimensions in (mm)	Sheet 1/1	

CAD Software PTC Creo

REV. 1

All proprietary rights reserved by MTA S.p.A. - This drawing shall not be reproduced, or in any way utilized, for the manufacture of the component or unit herein illustrated and must not be released to other parties, without written consent.
Any infringiment will be legally pursued.