THIS DRAWING IS UNPUBLISHED. RELEASED FOR PUBLICATION -
© COPYRIGHT 20 BY - ALL RIGHTS RESERVED.

REVISIONS

P	LTR	DESCRIPTION	DATE	DWN	APVD
	A	NEW RELEASE	08APR2021	MK	BC

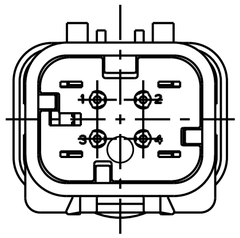

2320928-2
SCALE 2:1
KEY B

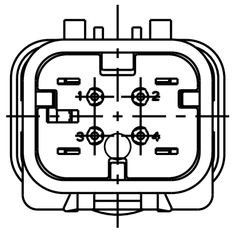

2320928-3
SCALE 2:1
KEY C

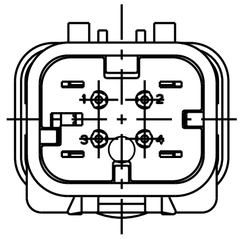

2320928-4
SCALE 2:1
KEY D

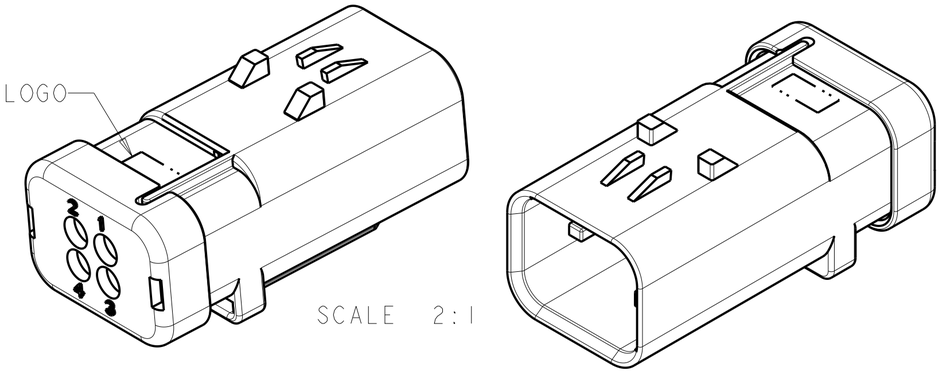

SCALE 2:1

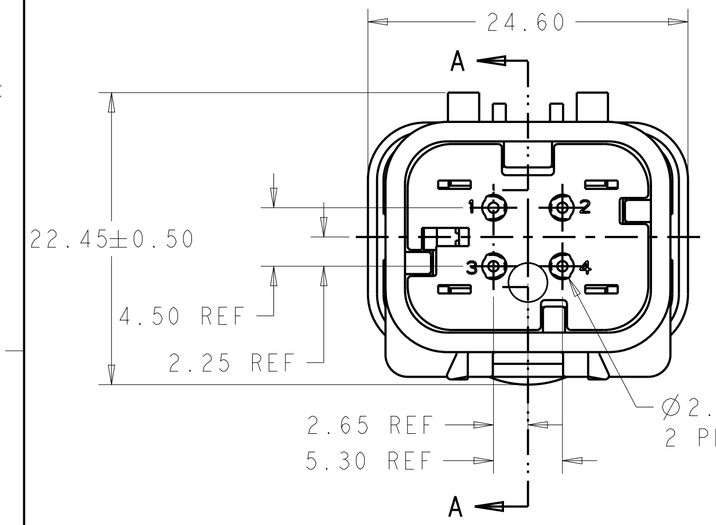

2320928-1 SHOWN
KEY A

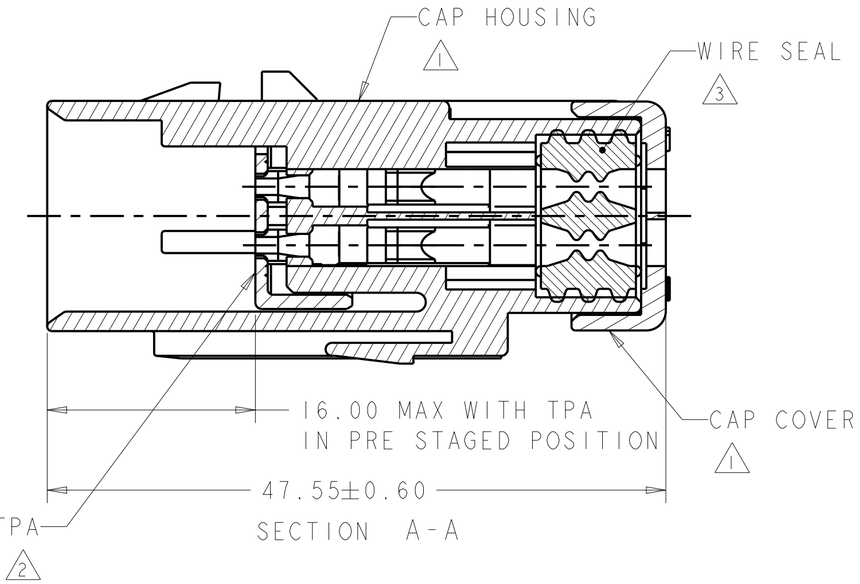

SECTION A-A

1. MATERIAL: 15% FIBERGLASS REINFORCED PBT
   COLOR: GRAY

2. MATERIAL: 15% FIBERGLASS REINFORCED PBT
   COLOR: (SEE TABLE)

3. MATERIAL: SILICONE
   COLOR: RUST

4. RECOMMENDED WIRE DIAMETER RANGE IS 1.30 TO 2.54mm.

5. RECOMMENDED BACKSHELLS:

   STRAIGHT EXIT
   A. 2292862-1 SMOOTH WIRE EXIT
   B. 2292862-2 NC16/NW13 CONDUIT WIRE EXIT
   C. 2292862-3 NC12/NW10 CONDUIT WIRE EXIT

   90° EXIT
   D. 2302483-1 SMOOTH WIRE EXIT
   E. 2302483-2 NC16/NW13 CONDUIT WIRE EXIT
   F. 2302483-3 NC12/NW10 CONDUIT WIRE EXIT

6. RECOMMENDED SEAL PLUG: 776363-1

7. MATING CONNECTOR: 2320934-X.

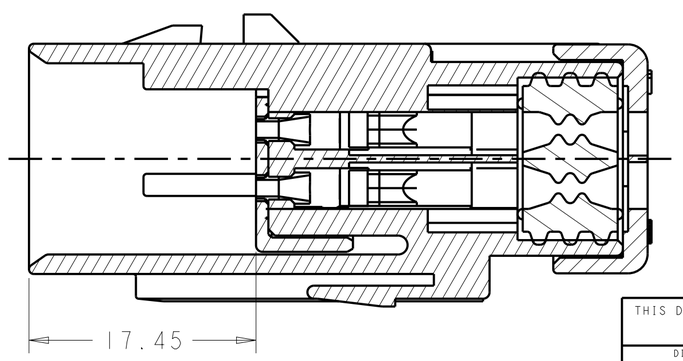

SECTION A-A
WITH TPA IN CLOSED POSITION

KEY	TPA COLOR	PART NUMBER
D	ORANGE	2320928-4
C	PURPLE	2320928-3
B	BLUE	2320928-2
A	TAN	2320928-1

THIS DRAWING IS A CONTROLLED DOCUMENT.

DIMENSIONS: mm

TOLERANCES UNLESS OTHERWISE SPECIFIED:
0 PLC ±-
1 PLC ±-
2 PLC ±0.30
3 PLC ±-
4 PLC ±-
ANGLES ±1°

MATERIAL -
FINISH -

DWN J MCNEAL 20FEB2018
CHK R BALTER 20FEB2018
APVD R BALTER 20FEB2018
PRODUCT SPEC 108-32602
APPLICATION SPEC 114-32362
WEIGHT 14g

TE Connectivity

NAME CAP ASSEMBLY, 4 POSITION, REDUCED DIA SEAL, HIGH TEMP, AMPSEAL 16

SIZE A2 | CAGE CODE 00779 | DRAWING NO C-2320928 | RESTRICTED TO -

CUSTOMER DRAWING | SCALE 3:1 | SHEET 1 OF 1 | REV A

1471-9 (3/13)