THIS DRAWING IS UNPUBLISHED
© COPYRIGHT - - ALL RIGHTS RESERVED.
RELEASED FOR PUBLICATION -

REVISIONS					
P	LTR	DESCRIPTION	DATE	DWN	APVD
	A	NEW RELEASE	07APR2021	MK	BC

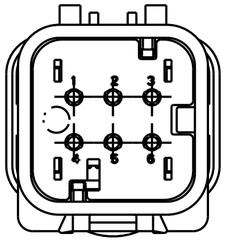

2320916-2 SHOWN
SCALE 2:1
KEY B

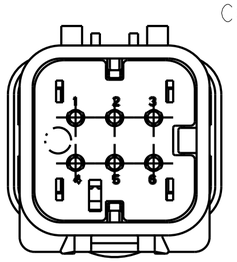

2320916-3 SHOWN
SCALE 2:1
KEY C

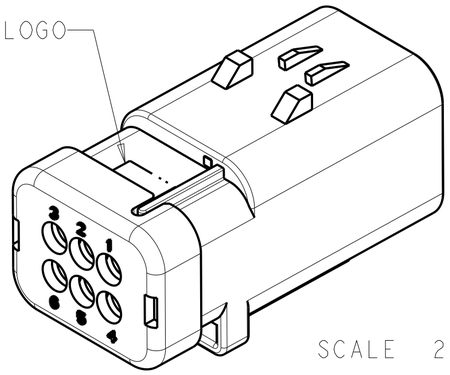

SCALE 2:1

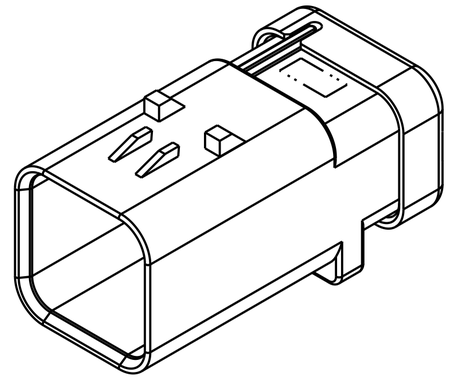

△1 MATERIAL: 15% FIBERGLASS REINFORCED PBT
COLOR: GRAY

△2 MATERIAL: 15% FIBERGLASS REINFORCED PBT
COLOR: (SEE TABLE)

△3 MATERIAL: SILICONE
COLOR: MARINE BLUE

4. RECOMMENDED WIRE DIAMETER RANGE IS 2.18 TO 3.67mm.

5. RECOMMENDED BACKSHELLS:

STRAIGHT EXIT
A. 2292863-1 SMOOTH WIRE EXIT
B. 2292863-2 NC16/NW13 CONDUIT WIRE EXIT
C. 2292863-3 NC12/NW10 CONDUIT WIRE EXIT

90° EXIT
D. 2302484-1 SMOOTH WIRE EXIT
E. 2302484-2 NC16/NW13 CONDUIT WIRE EXIT
F. 2302484-3 NC12/NW10 CONDUIT WIRE EXIT

6. RECOMMENDED SEAL PLUG: 776363-1

7. MATING CONNECTOR: 2320923-X.

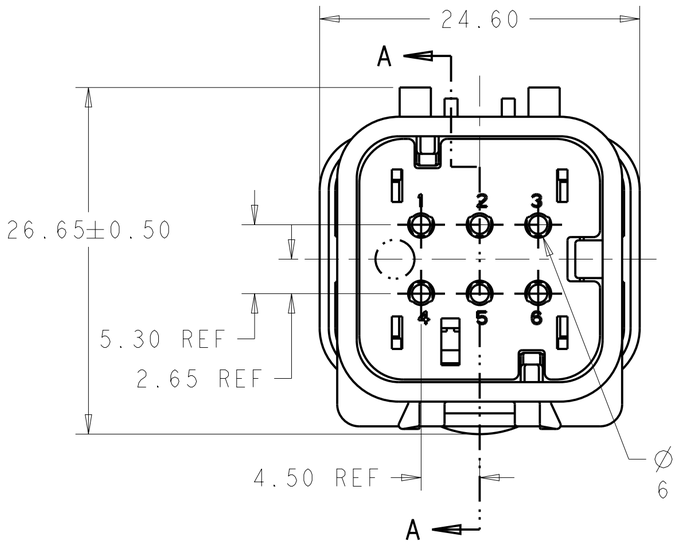

2320916-1 SHOWN
KEY A

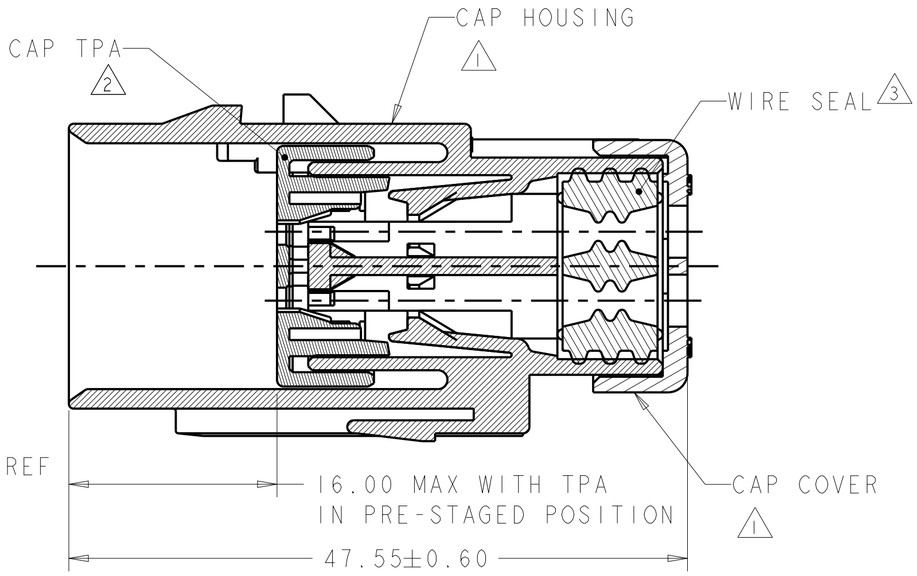

SECTION A-A

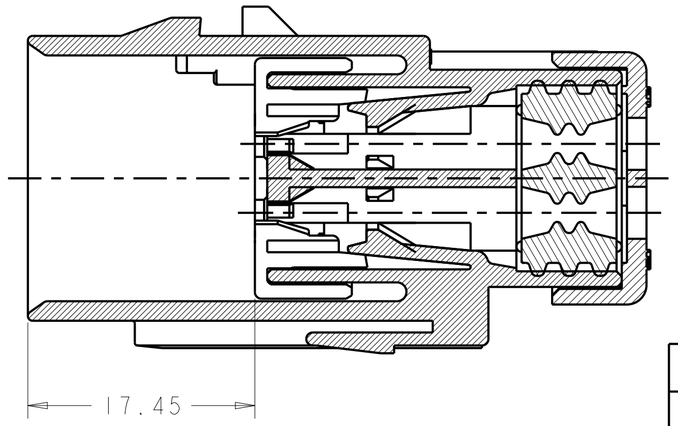

SECTION A-A
WITH TPA IN CLOSED POSITION

KEY	TPA COLOR	PART NUMBER
C	PURPLE	2320916-3
B	BLUE	2320916-2
A	TAN	2320916-1

THIS DRAWING IS A CONTROLLED DOCUMENT.

DIMENSIONS: mm

TOLERANCES UNLESS OTHERWISE SPECIFIED:
0 PLC ±-
1 PLC ±-
2 PLC ±0.30
3 PLC ±-
4 PLC ±-
ANGLES ±-

MATERIAL -
-

FINISH -
-

DWN J MCNEAL 05MAR2018
CHK R BALTER 05MAR2018
APVD R BALTER 05MAR2018
PRODUCT SPEC 108-32602
APPLICATION SPEC 114-32362
WEIGHT 15.5

TE Connectivity

NAME
CAP ASSEMBLY, 6 POSITION,
STD DIA SEAL, HIGH TEMP, AMPSEAL 16
-

SIZE A2 | CAGE CODE - | DRAWING NO C-2320916 | RESTRICTED TO -

CUSTOMER DRAWING | SCALE 1:1 | SHEET 1 OF 1 | REV A