THIS DRAWING IS UNPUBLISHED. RELEASED FOR PUBLICATION 20
© COPYRIGHT 20 - ALL RIGHTS RESERVED.

REVISIONS

P	LTR	DESCRIPTION	DATE	DWN	APVD
	A	NEW RELEASE	08APR2021	MK	BC

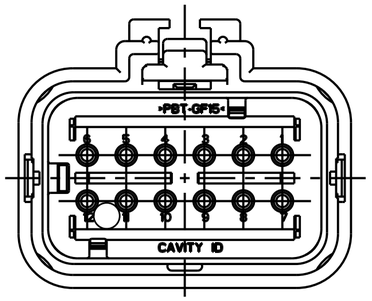

2320925-2
(BLUE TPA)
KEY B
SCALE 2:1

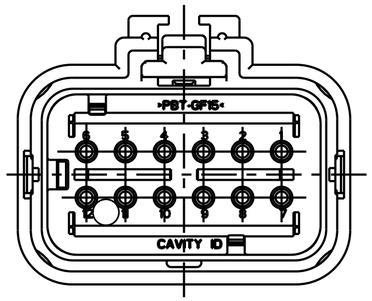

2320925-3
(PURPLE TPA)
KEY C
SCALE 2:1

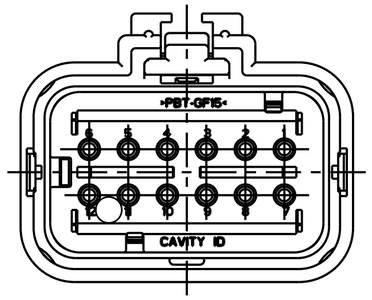

2320925-4
(ORANGE TPA)
KEY D
SCALE 2:1

1. MATERIAL: 15% FIBERGLASS REINFORCED PBT
   COLOR: GRAY
2. MATERIAL: 15% FIBERGLASS REINFORCED PBT
   COLOR: (SEE TABLE)
3. MATERIAL: SILICONE
   COLOR: GREEN
4. MATERIAL: 15% FIBERGLASS REINFORCED PBT
   COLOR: ORANGE
5. MATERIAL: SILICONE
   COLOR: TAN
6. RECOMMENDED WIRE DIAMETER RANGE IS 2.18 TO 3.67mm.
7. RECOMMENDED BACKSHELLS:

   STRAIGHT EXIT:
   - A. 2292802-1 SMOOTH WIRE EXIT
   - B. 2292802-2 NC20/NW17 CONDUIT WIRE EXIT
   - C. 2292802-3 NC16/NW13 CONDUIT WIRE EXIT

   90° EXIT:
   - D. 2302495-1 SMOOTH WIRE EXIT
   - E. 2302495-2 NC20/NW17 CONDUIT WIRE EXIT
   - F. 2302495-3 NC16/NW13 CONDUIT WIRE EXIT
8. RECOMMENDED SEAL PLUG: 776363-1
9. MATING CONNECTOR: 2320918-X.

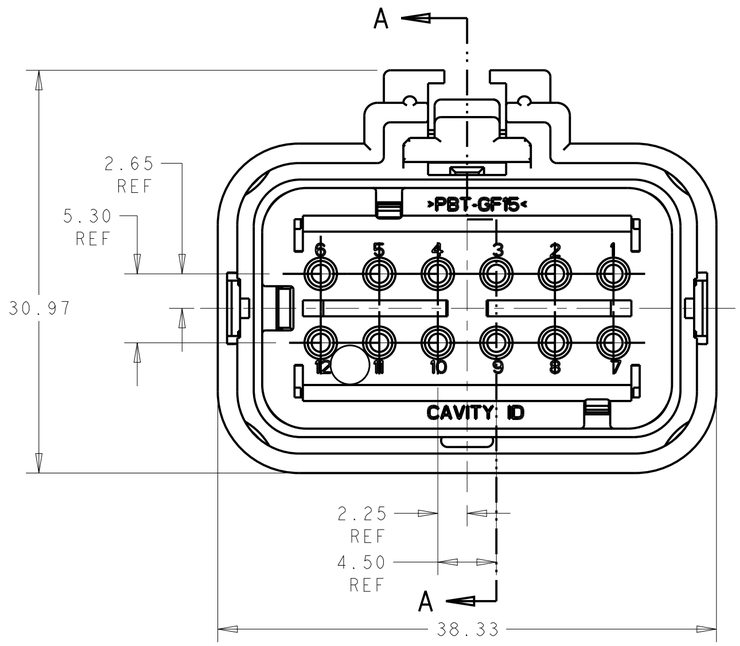

2320925-1 SHOWN
(TAN TPA)
KEY A

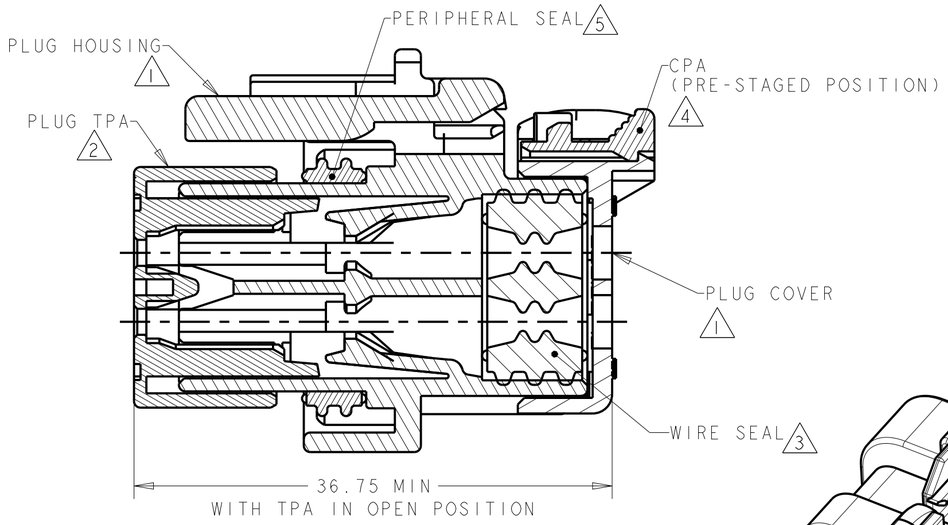

SECTION A-A

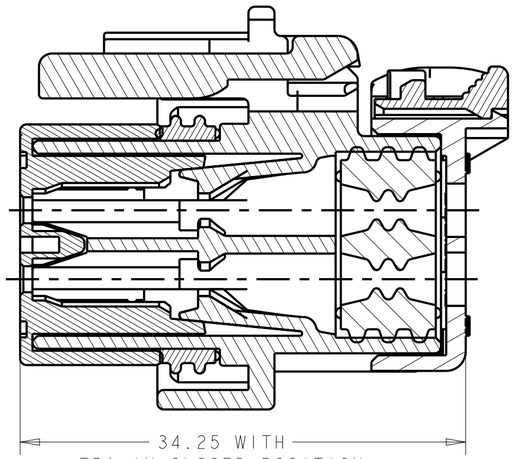

SECTION A-A
SCALE 3:1

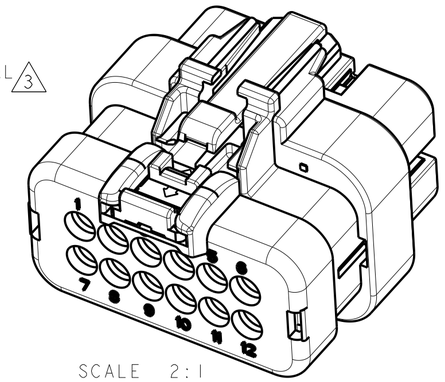

SCALE 2:1

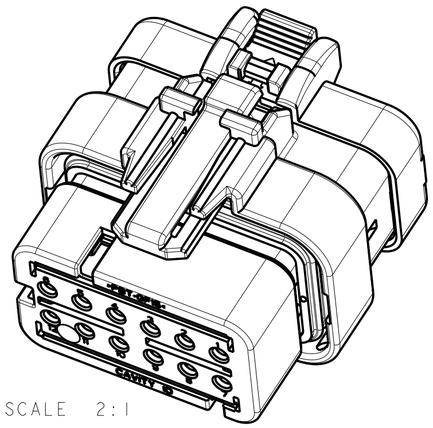

SCALE 2:1

KEY	TPA COLOR	PART NUMBER
D	ORANGE	2320925-4
C	PURPLE	2320925-3
B	BLUE	2320925-2
A	TAN	2320925-1

THIS DRAWING IS A CONTROLLED DOCUMENT.

DIMENSIONS: mm

TOLERANCES UNLESS OTHERWISE SPECIFIED:
0 PLC ±-
1 PLC ±-
2 PLC ±0.30
3 PLC ±-
4 PLC ±-
ANGLES ±-

MATERIAL -
FINISH -

DWN J MCNEAL 12OCT2018
CHK R BALTER 12OCT2018
APVD R BALTER 12OCT2018
PRODUCT SPEC 108-32602
APPLICATION SPEC 114-32362
WEIGHT 20±1g
CUSTOMER DRAWING

TE Connectivity

NAME
PLUG ASSEMBLY,
12 POSITION, STD DIA SEAL
HIGH TEMP, AMPSEAL 16

SIZE	CAGE CODE	DRAWING NO	RESTRICTED TO
A2	00779	C-2320925	-

SCALE 1:1 SHEET 1 OF 1 REV A

1471-9 (3/13)