THIS DRAWING IS UNPUBLISHED. RELEASED FOR PUBLICATION -
© COPYRIGHT 20 BY - ALL RIGHTS RESERVED.

REVISIONS

P	LTR	DESCRIPTION	DATE	DWN	APVD
	D	REVISED PER ECO-13-019168	05DEC2013	DR	RB
	D1	REVISED PER PCN-23-190965	31OCT2023	AP	CB

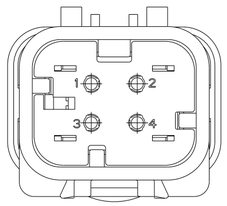

776488-2
SCALE 2:1

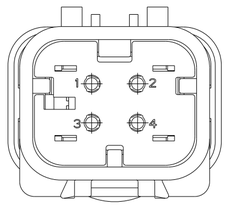

776488-3
SCALE 2:1

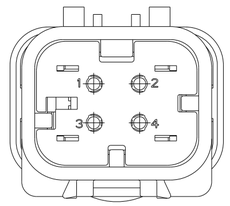

776488-4
SCALE 2:1

1. MATERIAL: 15% GLASS FILLED THERMOPLASTIC
   COLOR: BLACK
2. MATERIAL: 15% GLASS FILLED THERMOPLASTIC
   COLOR: (SEE TABLE)
3. MATERIAL: SILICONE
   COLOR: GREEN

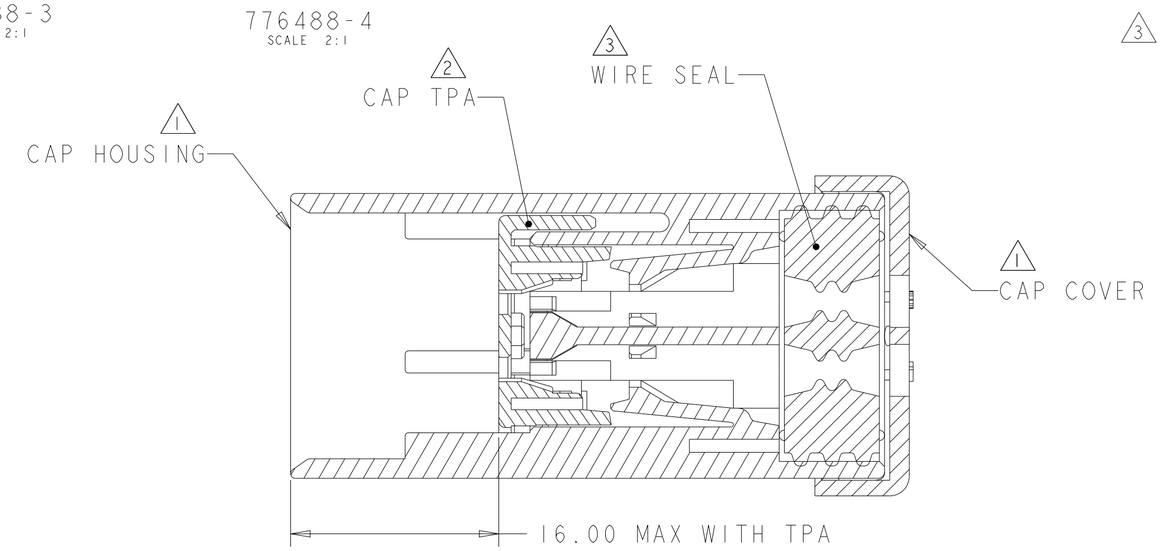

SECTION A-A

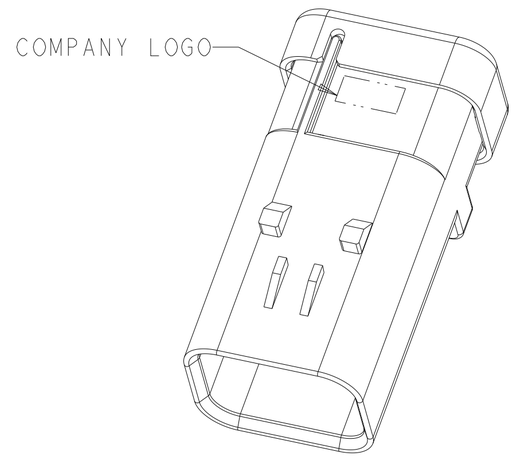

SCALE 2:1

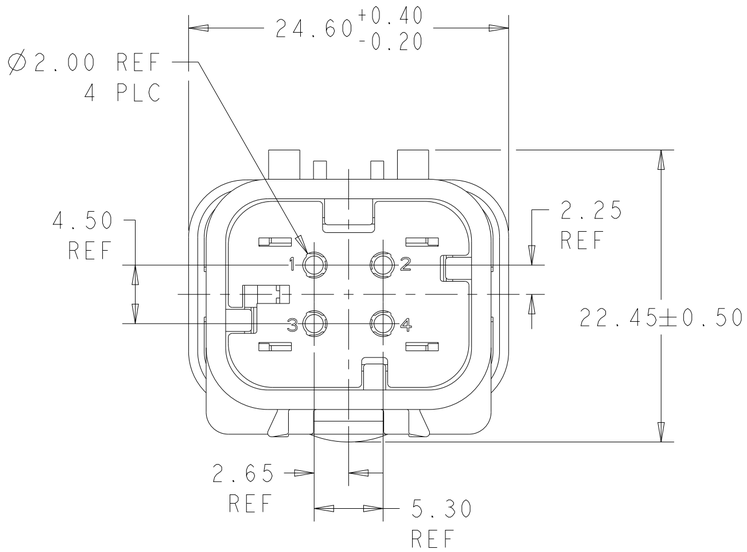

776488-1 SHOWN

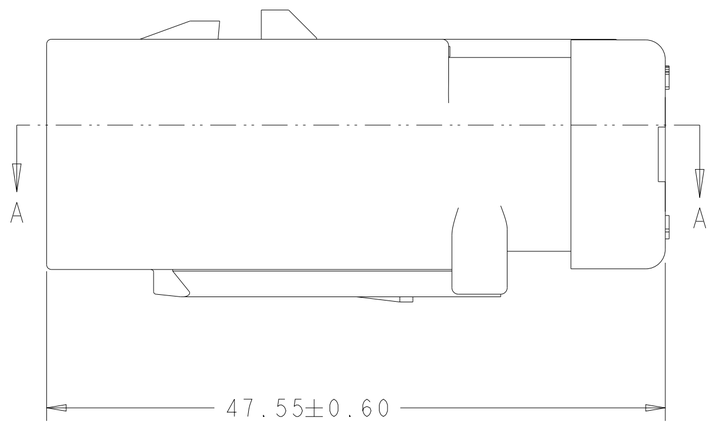

GREEN	776488-4
YELLOW	776488-3
GRAY	776488-2
RED	776488-1
TPA COLOR	PART NUMBER

THIS DRAWING IS A CONTROLLED DOCUMENT.

DIMENSIONS: mm

TOLERANCES UNLESS OTHERWISE SPECIFIED:
0 PLC ±-
1 PLC ±-
2 PLC ±-
3 PLC ±-
4 PLC ±-
ANGLES ±-

MATERIAL -
-

FINISH -
-

DWN W HOELSCHER 16DEC02
CHK B. SIMPSON 18DEC02
APVD D. KLEIN 18DEC02
PRODUCT SPEC 108-2184
APPLICATION SPEC 114-13065
WEIGHT 14

TE Connectivity

NAME CAP ASSEMBLY, 4 POSITION, DUAL ROW, AMPSEAL 16

SIZE A2 | CAGE CODE 00779 | DRAWING NO C-776488 | RESTRICTED TO -

Customer Drawing | SCALE 3:1 | SHEET 1 OF 1 | REV D1

1471-9 (3/13)