© COPYRIGHT TE Connectivity. All Rights Reserved.
THIS DRAWING IS UNPUBLISHED.
VERTRAULICHE UNVEROFFENTLICHTE ZEICHNUNG

RELEASED FOR PUBLICATION
FREIFUER VEROEFFENTLICHUNG

MATED WITH:
PASSEND ZU:
CD-1355064

LOC A1 | DIST –
PROJECT NR.: –

P	LTR	DESCRIPTION BESCHREIBUNG	DATE	DWN	APVD
	A9	E-24-215519	22JUL2024	SH	MC
	A10	E-24-216531	02AUG2024	SH	MC

REVISIONS
AENDERUNGEN

REMARKS
Bemerkungen

1. PRE TINNED 1–2µm
vorverzinnt

2. ZONE "A": MIN 0.8µm ELECTROPL. Au OVER MIN 1.3µm ELECTROPL. Ni LAYER
min 0.8µm galv. Au über min 1.3µm galv. Ni
ZONE "B": 1–2µm ELECTROPL. Sn OVER MIN 0.1µm ELECTROPL. Ni
1–2µm galv. Sn über min 0.1µm galv. Ni
REST: min 0.1µm ELECTROPL. Ni
min 0.1µm galv. Ni

3. ZONE "A": MIN 3µm ELECTROPL. Ag
min. 3µm galv. Ag
REST: 0.5µm ELECTROPL. Ag
0.5µm galv. Ag

4. ZONE "A": MIN 3µm ELECTROPL. Ag
min 3µm galv. Ag
ZONE "B": 1–3µm ELECTROPL. Sn
1–3µm galv. Sn
REST: SILVER OR TIN ALLOWED IN TRANSITION AREAS.OVERLAPPING LAYERS AND PLAIN SURFACES ARE NOT ALLOWED.
Silber oder Zinn im übergangsbereich erlaubt.
überlagernde Schichten oder blanke Stellen sind nicht erlaubt.

5. AVAILABILITY MUST BE CHECKED BY TE CONNECTIVITY
Verfügbarkeit ist von TE CONNECTIVITY zu prüfen

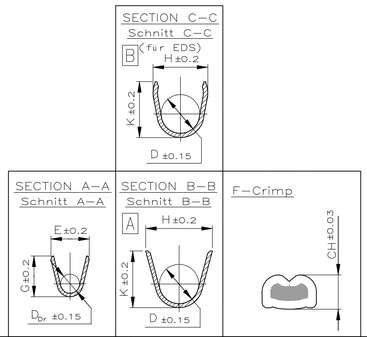

															ORDER–Nr. SINGLE SEAL Einzeldichtung	ORDER–Nr. DEAD END PLUG Blindstopfen
Version B (SINGLE WIRE SEAL–SYSTEM / Einzel–Dichtungs–System)	1–962801–4	1–962983–4	A	CuNiSi	4	>2.5–4.0 FLR	E = 4.3	B H = 5.4	4.0mm² = 2.30	MQC–Applicator 4151297–X	–	4	6.9	8.5	828985–1	–
	962801–7	962983–7	L		3		G = 4.5	K = 5.9	3.0mm² = 2.05							
	962801–1	962983–1	L		1		D_{Dr} = 2.4	D = 3.9								
	1–929975–4	1–962982–4	A	CuNiSi	4	>1.0–2.5 FLR	E = 3.6	B H = 5.0	2.5mm² = 1.97	MQC–Applicator 2–878486–2 2151345	539679–2 1579024–5	4	6.9	8.5	828921–1	828922–1
	929975–8	962982–8	N		2		G = 3.8	K = 5.0	2.0mm² = 1.82							
	929975–7	962982–7	N		3		D_{Dr} = 1.7	D = 3.6	1.5mm² = 1.67							
	929975–1	962982–1	M		1											
	1–929974–4	1–962981–4	A	CuNiSi	4	0.5–1.0 FLR	E = 2.6	B H = 4.8	1.0mm² = 1.45	MQC–Applicator 2–878485–2 2151139	734289–1 1579024–3	3	5.4	7	828920–1	828922–1
	929974–8	962981–8	N		2		G = 2.8	K = 4.8	0.75mm² = 1.36							
	929974–7	962981–7	N		3		D_{Dr} = 1.1	D = 3.2	0.5mm² = 1.27							
	929974–1	962981–1	M		1											
	1–929973–4	1–962980–4	A	CuNiSi	4	0.2–0.4 FLR	E = 2.1	B H = 4.5	–	MQC–Applicator 2–878484–2 2151732	734289–1 1579024–3	3	5.4	7	828920–1	828922–1
	5 929973–8	962980–8	N		2		G = 2.1	K = 4.5	0.35mm² = 1.11							
	5 929973–7	962980–7	N		3		D_{Dr} = 0.8	D = 3.2	–							
	929973–1	962980–1	M		1											
	ORDER–Nr. STRIP FORM Bandware	ORDER–Nr. LOOSE PIECE Einzelausführung	REV.	MATERIAL Werkstoff	SURFACE Oberfläche	DGB [mm²]	WIRE CRIMP Drahtcrimp	INSUL.–CRIMP Isol.–Crimp	WIRE CRIMP HEIGHT CH Drahtcrimp–Höhe CH	APPLICATION TOOL Anschlag–WKZ	HAND TOOL Handzange	A	B	C		
							CRIMP DIMENSION (mm) Crimpabmessungen (mm)			EXTRACTION TOOL Ausdrückwerkzeug Nr.: 872070–1						

Version A (UNSEALED / ungedichtet)	1–929972–4	1–962979–4	A	CuNiSi	4	>2.5–4.0 FLR	E = 4.3	A H = 5.4	4.0mm² = 2.30	MQC–Applicator 2–878483–2 2836098	734285–3 734289–3	4	5.5	8.5		
	5 929972–8	962979–8	K		2		G = 4.5	K = 5.6	3.0mm² = 2.05							
	5 929972–7	962979–7	K		3		D_{Dr} = 2.4	D = 3.2								
	929972–1	962979–1	J		1											
	1–929971–4	1–962978–4	A	CuNiSi	4	>1.0–2.5 FLR	E = 3.6	A H = 4.3	2.5mm² = 1.97	MQC–Applicator 2–878482–2 2266503	734285–2	4	5.5	8.5		
	929971–8	962978–8	M		2		G = 3.8	K = 4.5	2.0mm² = 1.82							
	929971–7	962978–7	M		3		D_{Dr} = 1.7	D = 2.6	1.5mm² = 1.67							
	929971–1	962978–1	L		1											
	1–929970–4	1–962977–4	A	CuNiSi	4	>0.5–1.0 FLR	E = 2.6	A H = 3.2	1.0mm² = 1.45	MQC–Applicator 2–878481–2 2266254	734285–1 2–1579024–5	3	4.5	7		
	929970–8	962977–8	M		2		G = 2.8	K = 3.4	0.75mm² = 1.36							
	929970–7	962977–7	M		3		D_{Dr} = 1.1	D = 1.8	0.5mm² = 1.27							
	929970–1	962977–1	L		1											
	1–929969–4	1–962976–4	A	CuNiSi	4	0.2–0.4 FLR	E = 2.1	A H = 2.5	0.35mm² = 1.11	MQC–Applicator 2–878480–2 2836097	734285–1 2–1579024–4	3	4.5	7		
	5 929969–8	962976–8	K		2		G = 2.1	K = 2.5	0.25mm² = 1.07							
	5 929969–7	962976–7	K		3		D_{Dr} = 0.8	D = 1.4	0.2mm² = 1.05							
	929969–1	962976–1	J		1											
	ORDER–Nr. STRIP FORM Bandware	ORDER–Nr. LOOSE PIECE Einzelausführung	REV.	MATERIAL Werkstoff	SURFACE Oberfläche	DGB [mm²]	WIRE CRIMP Drahtcrimp	INSUL.–CRIMP Isol.–Crimp	WIRE CRIMP HEIGHT CH Drahtcrimp–Höhe CH	APPLICATION TOOL Anschlag–WKZ	HAND TOOL Handzange	A	B	C		
							CRIMP DIMENSION (mm) Crimpabmessungen (mm)			EXTRACTION TOOL Ausdrückwerkzeug Nr.: 872070–1						

VERSION A
(USEALED / ungedichtet)

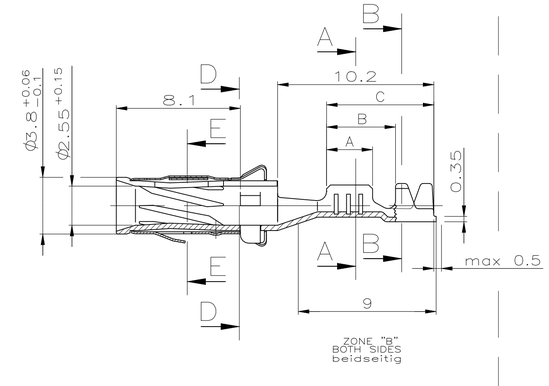

VERSION B
(SINGLE WIRE SEAL–SYSTEM / Einzel–Dichtungs–System)

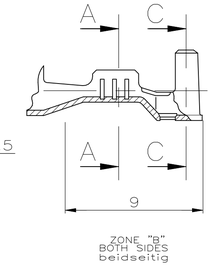

CUT–OFF FOR STRIP FORM AND LP–PARTS
Trennstelle fuer Bandware und LP–Teile

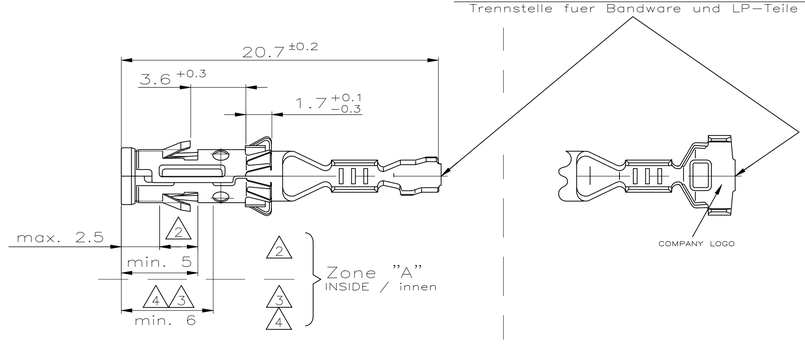

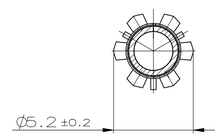

SECTION / Schnitt D–D

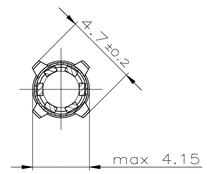

SECTION / Schnitt E–E

THIS DRAWING IS A CONTROLLED DOCUMENT. DIESE ZEICHNUNG IST EIN KONTROLLIERTES DOKUMENT	DWN 25–JUN–2001 C. Goetz	TE Connectivity	
	CHK 25–JUN–2001 J. Granzow		
DIMENSIONS: DIMENSIONEN mm	TOLERANCES UNLESS OTHERWISE SPECIFIED: ALLGEMEINTOLERANZEN	APVD –	NAME DIA. 2.5MM SOCKET CONTACT DIA 2.5mm Buchsenkontakt –
	0 PLC / DEC ± – 1 PLC / DEC ± – 2 PLC / DEC ± – 0.15mm 3 PLC / DEC ± – 4 PLC / DEC ± – ANGLES / ANGOLI ± 1.5°	PRODUCT SPEC PRODUKTSPEZ 108–18027 APPLICATION SPEC VERARBEITUNGSSPEZ 114–18020	
MATERIAL SEE TABLE	FINISH / OBERFLAECHE / FARBE SEE TABLE	WEIGHT GEWICHT	SIZE A1 · CAGE CODE · DRAWING NO ZEICHNUNGS-NR C–1355065 · RESTRICTED TO NUR FUER –
		CUSTOMER DRAWING / KUNDENZEICHNUNG	SCALE MASSSTAB 5:1 · SHEET BLATT 1 OF VON 1 · REV. A10

4805 (1/15)